REVISIONS						
ECR	REV.	DESCRIPTION	DATE	DR.	AUTH.	CHK.
4143	0	INITIAL RELEASE	12/4/2023	MO	AS	MG

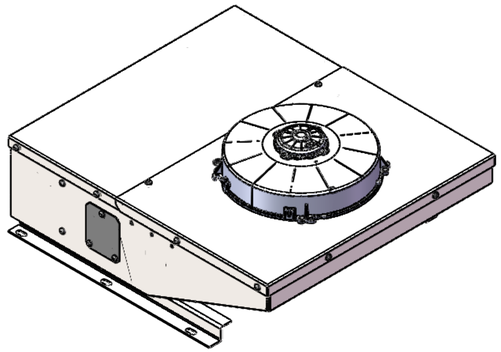

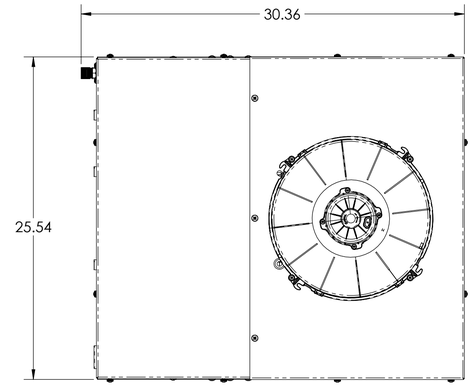

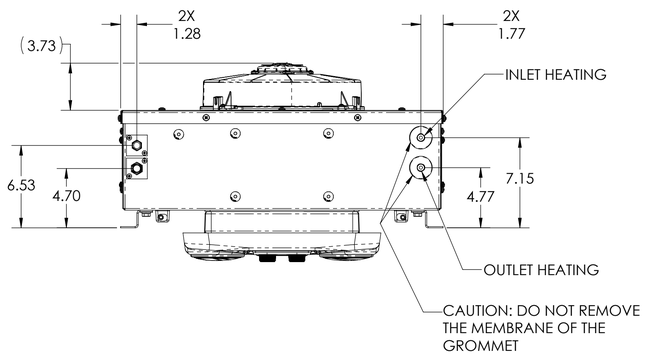

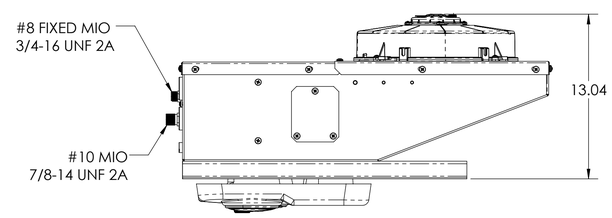

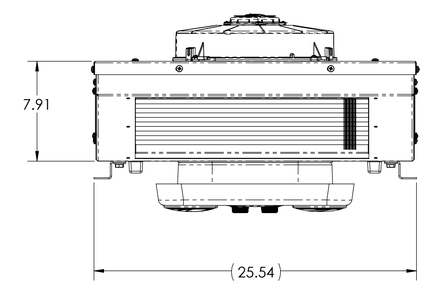

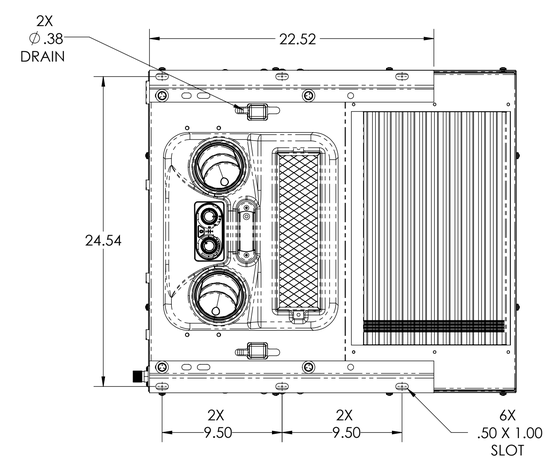

SPECIFICATION 47-7053-1190	
COOLING CAPACITY	26.7k BTU/Hr. (7.8 KW) per IMACA
HEATING CAPACITY	13.7k BTU/Hr. (4.0 KW) per Q80
AIR FLOW	407 CFM @ 0" Static Pressure in H2O
REFRIGERANT	TYPE: R-134a (PRE-CHARGED)
	CHARGE: 2LB 2OZ (WITH COMPRESSOR 10 FT. AWAY)
CONTROLLER	3 SPEED EVAPORATOR BLOWER (AND ADJUSTABLE THERMOSTAT)
PLENUM	PLASTIC WITH LOUVERS
FINISH	WHITE POWDER COATED
ELECTRICAL DATA	25.7 Amps @ 13 VDC (INCLUDED 2 AMPS FOR AC CLUTCH)
CONDENSOR	ONE SINGLE SPEED
WEIGHT	73LB HVAC UNIT

- ELECTRIC ACTUATED WATER VALVE
- REMOTE CONTROLL PANEL INCLUDED WITH PRESSURIZER SWITCH(PRESSURIZER OPTIONAL)
- 30FT HEATING VALVE EXTENSION HARNESS (OPTIONAL)
- PRESSURIZER RELAY (OPTIONAL)
- STANDARD PLENUM WITH DRIVER CONTROLLER
- UNIT WITH COOLING ONLY (OPTIONAL)

SPECIFICATION 47-7053-2190	
COOLING CAPACITY	26.7k BTU/Hr. (7.8 KW) per IMACA
HEATING CAPACITY	13.7k BTU/Hr. (4.0 KW) per Q80
AIR FLOW	407 CFM @ 0" Static Pressure in H2O
REFRIGERANT	TYPE: R-134a (PRE-CHARGED)
	CHARGE: 2LB 2OZ (WITH COMPRESSOR 10 FT. AWAY)
CONTROLLER	3 SPEED EVAPORATOR BLOWER (AND ADJUSTABLE THERMOSTAT)
PLENUM	PLASTIC WITH LOUVERS
FINISH	WHITE POWDER COATED
CURRENT DRAW	13 Amps @ 26 VDC (INCLUDES 2 AMPS FOR AC CLUTCH)
CONDENSOR	ONE SINGLE SPEED
WEIGHT	73LB HVAC UNIT

- ELECTRIC ACTUATED WATER VALVE
- REMOTE CONTROLL PANEL INCLUDED WITH PRESSURIZER SWITCH(PRESSURIZER OPTIONAL)
- 30FT HEATING VALVE EXTENSION HARNESS (OPTIONAL)
- PRESSURIZER RELAY (OPTIONAL)
- STANDARD PLENUM WITH DRIVER CONTROLLER
- UNIT WITH COOLING ONLY (OPTIONAL)

NOTES:
1. REFERENCE VISER-0023 FOR HARDWARE TORQUE REQUIREMENTS
2. REFERENCE VISER-0025 FOR HVAC FITTING TORQUE REQUIREMENTS
3. UNIT LABEL WILL CONTAIN: MODEL #, SERIAL #, VOLTAGE, REFRIGERANT TYPE AND CHARGE

OPTIONAL WATER VALVE SUBASSEMBLIES OFFERED SEPARATELY:
34-0000-006 : 12V, FLOW AWAY FROM CABLE, ACTUATOR & MANUAL WATER VALVE KIT
34-0000-008 : 24V, FLOW AWAY FROM CABLE, ACTUATOR & MANUAL WATER VALVE KIT
34-0000-007 : 12V, FLOW TO CABLE, ACTUATOR, MANUAL WATER VALVE KIT
34-0000-009 : 24V, FLOW TO CABLE, ACTUATOR, MANUAL WATER VALVE KIT

IMPERIAL INCH FORMAT:
UNLESS OTHERWISE SPECIFIED
DIMENSIONS ARE IN INCHES WITH
METRIC CONVERSION IN [MILLIMETERS]

UNLESS OTHERWISE SPECIFIED TOLERANCES ON:
.00DEC ±.04 | .000DEC ±.020 | DEC ±XXX | ANG ±2°
[.0]DEC ±[1.0] | [.00]DEC ±[.5] | DEC ±[XXX]
SURFACES AA | HOLE DIA ±.005 [±.13] | HOLE SPACING ±.015 [±.38] | HOLE LOC ±.03 [±.8]

DIMENSION IN (PARENTHESIS) ARE FOR INFORMATION ONLY.
CRITICAL DIMENSIONS MARKED "⬭":

MATERIAL: SEE NOTES

DO NOT SCALE DRAWING

INTERPRET GEOMETRIC TOLERANCING PER: ASME Y14.5-2009

	NAME	DATE
DRAWN	MO	12/4/23
CHECKED	MG	12/4/23
ENG APPR.	AS	12/4/23

THIRD ANGLE PROJECTION

PROPRIETARY AND CONFIDENTIAL
THE INFORMATION CONTAINED IN THIS DRAWING IS THE SOLE PROPERTY OF VISIONAIRE, INC. ANY REPRODUCTION IN PART OR AS A WHOLE WITHOUT THE WRITTEN PERMISSION OF VISIONAIRE, INC. IS PROHIBITED.

VISIONAIRE, INC.
1401 VALLEY VIEW LN #135
IRVING, TX 75061

TITLE: 7053 UNIT SPECIFICATIONS

SIZE	DWG. NO.	REV
D	90-7053-001	0

SCALE: 1:6 | SHEET 1 OF 1